SANKYO OILLESS Industry GmbH

VALCAM VA™

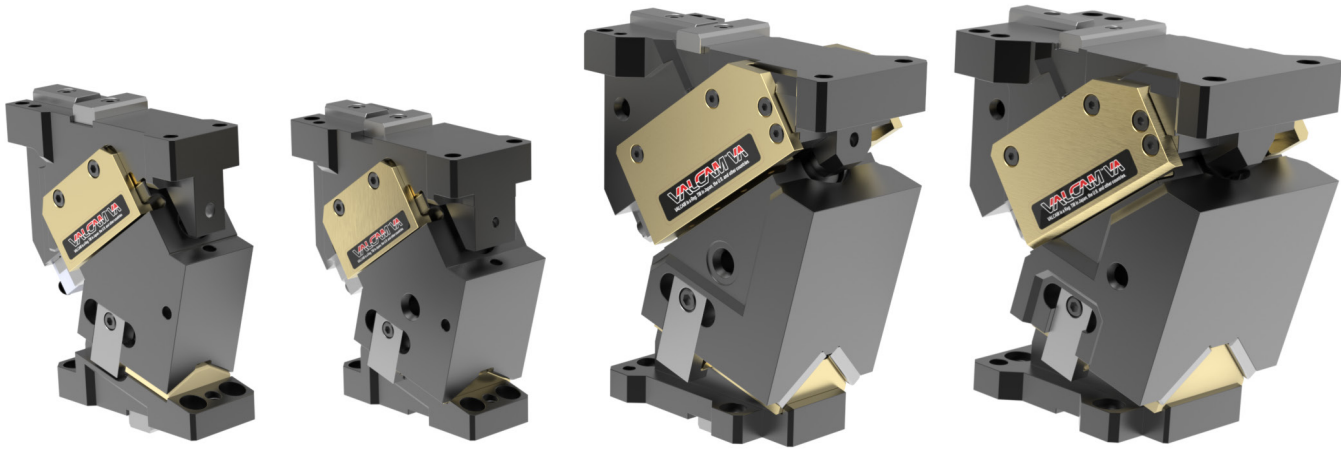

Aerial Cam Unit according to VDI requirements

VACBV

Rev.: 10/2023

For more than 50 years, SANKYO cam units have an excellent reputation in the international automotive industry. High technical competence and mature manufacturing know-how brought us recognition as one of the leading suppliers of cam units worldwide. Manufactured on high-precision production lines, the new VALCAM-VA series fulfill the highest quality standards. Designed for primarily European customers, the VALCAM-VA complies with the requirements of the VDI. To ensure very short delivery time, this cam unit series will be manufactured in Europe. In case of defects or crashes, we deliver within Europe replacements within 24h. A dedicated hotline is available at the phone number **+420 604156881** around the clock, 365 days a year.

Specifications:

- Maintenance free aerial cam unit for heavy duty and long lifetime (1 mio. strokes guaranteed)
- Compact design, high working forces, suitable for high speed presses
- Sliding elements: bronze with solid lubricants - hardened slide surfaces
- Gas spring type acc. to VDI 3003
- Urethan Stopper
- Available from 0° to 75°, in 5° steps
- Positive return follower at both sides
- End positioning kit (Lock-System)
- Positioning in the die with dowel pins or cross keys
- CAD data in different file formates, also „VDI-Kaufschieberadapter“, at **www.sankyo-oilless.de** available

Parts list

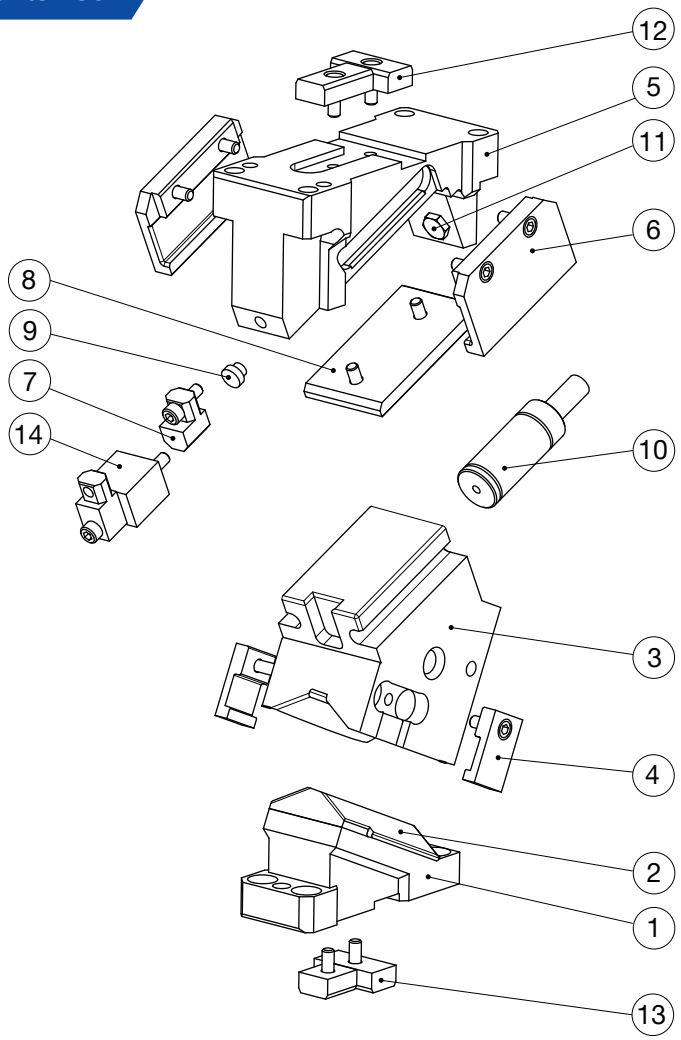

Lock System

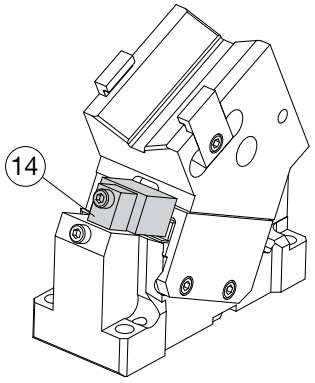

Pos.	Description	Material	Pcs.
1	Cam Driver	EN-GJS-600-3	1
2	Slide Plate	Bronze with Graphite	1
3	Cam Slider	EN-GJS-600-3	1
4	Positive Return Follower	Steel	2
5	Cam Holder	EN-GJS-600-3	1
6	Slide Keeper	Bronze with Graphite	2
7	Stopper Plate	Steel	1
8	Slide Plate	Bronze with Graphite	1
9	Urethan Stopper	Urethane	1
10	Gas Spring	Options	1
11	Spring Stopper	Steel	1
12	Key - Cam Holder	Steel	2
13	Key - Driver	Steel	2
14	Lock System	Steel	1

Disassembly of gas spring

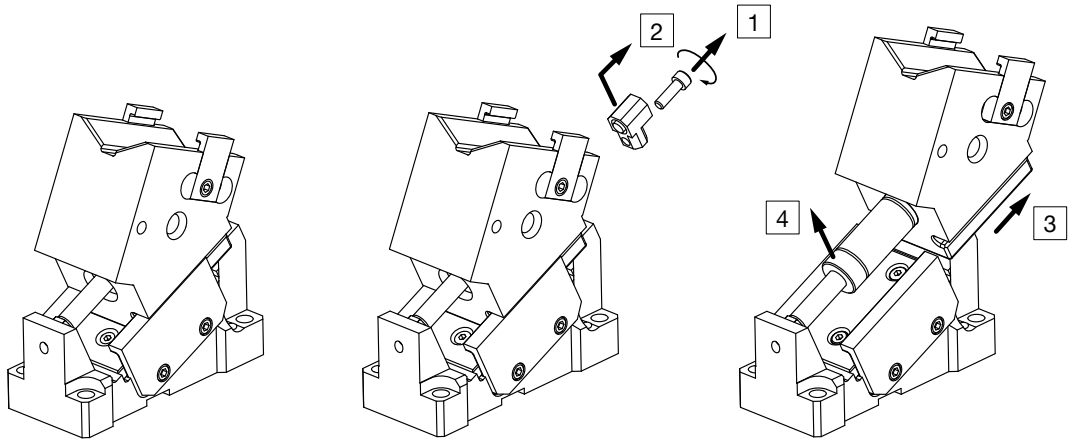

1. Loosen the fixing bolt
2. Remove the stopper plate
3. Move the cam slider to the rear (until the gas spring is removable)
4. Remove the gas spring

General

Working force matrix

VACBV65

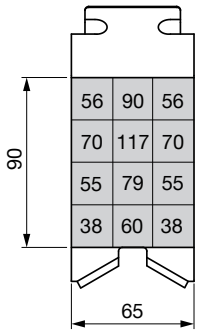

VACBV85

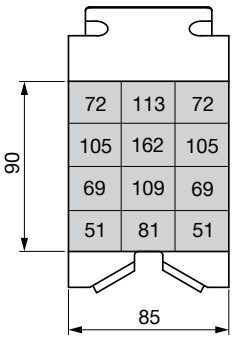

VACBV110

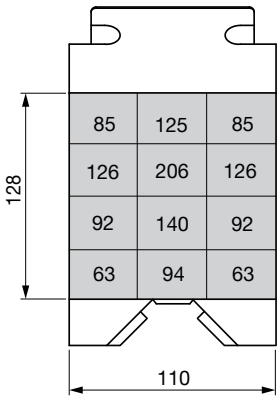

VACBV165

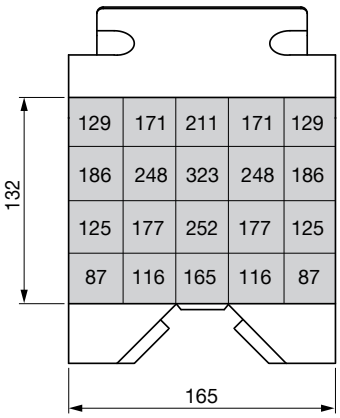

data in kN

Options

	Gas spring brand
- GK	Kaller
- GD	Dadco
- GSS	Special Springs

Option	Description
- K	Keys mounted **
- NGP	without gas spring
- NF	Gas spring not filled

** without „-K“ keys only added, not mounted

Order examples

Cam typ	Width		Angle		Gas spring		Option
VACBV	**85**	**-**	**25**	**-**	**GSS**	**-**	**NF - K**
VACBV	**85**	**-**	**25**	**-**	**NGP**	**-**	**K**
VACBV	**85**	**-**	**25**	**-**	**GD**		

VACBV65 117kN

Cam width	Working force centrical	Working angle	Cam hight	Working surface	Max. tool weight	Gas spring type
65mm	117kN	0°~75	225mm	65mm x 90mm	3,8kg	VDI

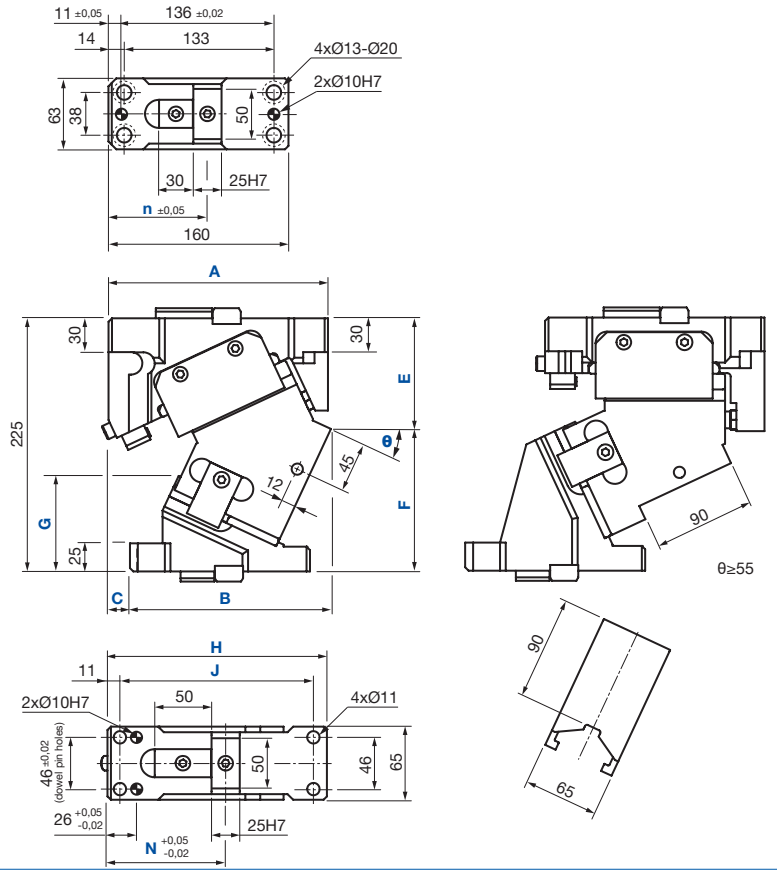

Cam diagram

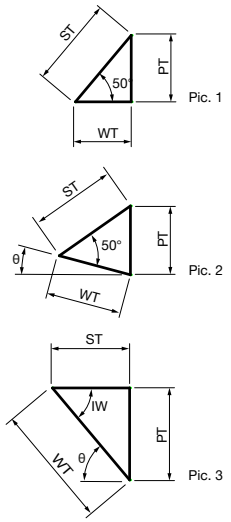

Rear Removable Space

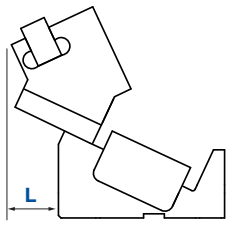

[mm]

	θ	A	B	C	E	F	G	H	J	N	n	L	Total weight [kg]	Cam slider weight [kg]	Return force [kN]	WT	PT	ST	IW	Pic.
VACBV65-00	0°	196,00	135,00	61	76,00	149,00	54,00	180	157	105	96	150	15.6	5,4	6,7	28,9	34,5	45,0	-	1
VACBV65-05	5°	197,50	143,50	54	81,38	143,62	58,10	185	162	105	94	150	15.4	5,4	6,7	31,9	34,6	45,0	-	2
VACBV65-10	10°	199,80	152,80	47	85,62	139,38	64,10	190	167	105	93	150	15.3	5,4	6,7	35,0	35,0	45,0	-	2
VACBV65-15	15°	198,90	161,90	37	89,70	135,30	70,70	190	167	105	91	120	15.1	5,4	6,7	38,2	35,7	45,0	-	2
VACBV65-20	20°	198,84	169,84	29	94,61	130,39	77,00	195	172	105	88	120	15.0	5,4	6,7	41,5	36,7	45,0	-	2
VACBV65-25	25°	197,61	178,61	19	98,33	126,67	84,90	195	172	105	88	120	14.9	5,4	6,7	45,0	38,0	45,0	-	2
VACBV65-30	30°	196,25	186,25	10	102,86	122,14	92,40	200	177	110	88	100	14.9	5,4	6,7	48,8	39,8	45,0	-	2
VACBV65-35	35°	193,76	194,76	-1	107,17	117,83	100,20	200	177	110	88	100	14.8	5,4	6,7	53,1	42,1	45,0	-	2
VACBV65-40	40°	189,16	202,16	-13	112,25	112,75	107,50	200	177	115	88	100	14.9	5,4	6,7	57,9	45,0	45,0	-	2
VACBV65-45	45°	182,49	208,49	-26	118,11	106,89	114,00	200	177	115	88	90	15.0	5,4	6,6	62,0	47,7	44,0	-	2
VACBV65-50	50°	170,74	213,74	-43	122,73	102,27	121,60	195	172	115	88	90	15.0	5,4	6,4	62,2	47,7	40,0	-	2
VACBV65-55	55°	169,10	221,10	-52	124,75	100,25	124,80	195	172	115	88	90	15.1	5,5	7,2	59,3	48,6	34,0	55°	3
VACBV65-60	60°	167,14	228,14	-61	126,71	98,29	128,90	195	172	115	88	90	15.3	5,5	7,6	60,0	52,0	30,0	60°	3
VACBV65-65	65°	165,29	239,29	-71	129,48	95,52	132,40	195	172	115	88	80	15.6	5,7	8,1	59,2	53,6	25,0	65°	3
VACBV65-70	70°	162,62	244,62	-82	131,24	93,76	134,90	195	172	115	88	80	16.0	6,0	9,8	58,5	55,0	20,0	70°	3
VACBV65-75	75°	159,90	252,90	-93	133,78	91,22	136,90	195	172	115	88	80	16.3	6,2	11,4	58,0	56,0	15,0	75°	3

VACBV85
162kN

Cam width	Working force centrical	Working angle	Cam hight	Working surface	Max. tool weight	Gas spring type
85mm	162kN	0°~75	225mm	85mm x 90mm	4,5kg	VDI

Details

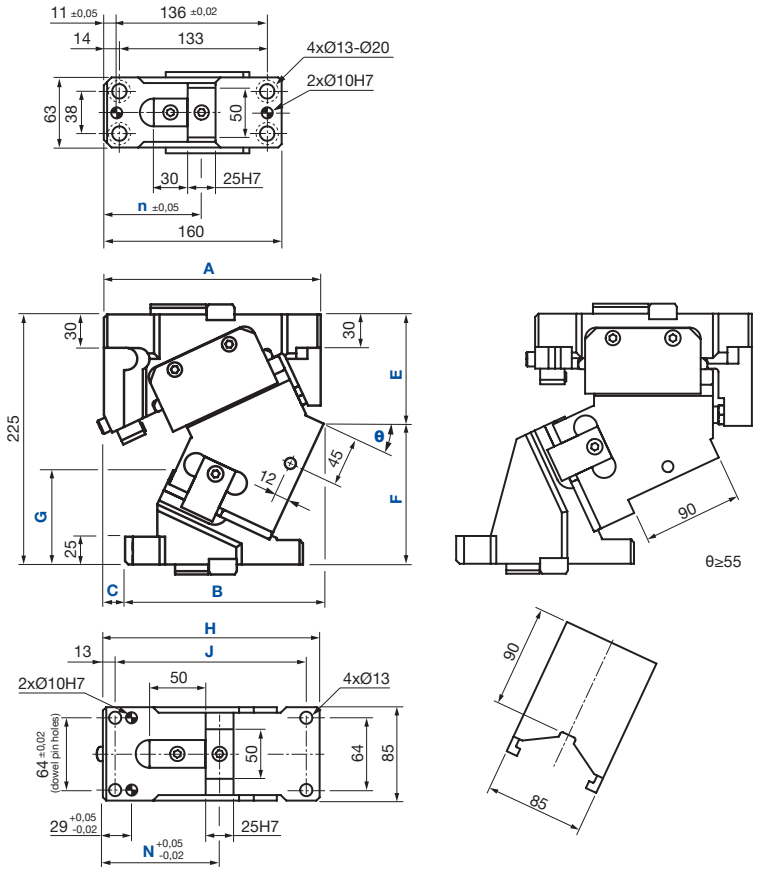

Cam diagram

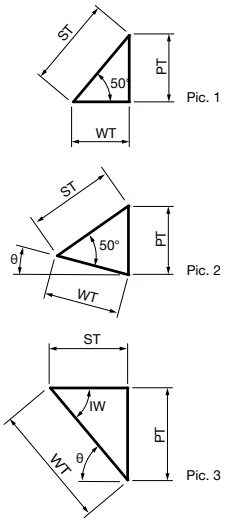

Rear Removable Space

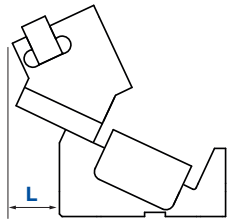

[mm]

	θ	A	B	C	E	F	G	H	J	N	n	L	Total weight [kg]	Cam slider weight [kg]	Return force [kN]	WT	PT	ST	IW	Pic.
VACBV85-00	0°	206,00	140,00	66	76,00	149,00	54,00	185	160	115	96	150	20.6	7,6	7,1	28,9	34,5	45,0	-	1
VACBV85-05	5°	207,48	148,48	59	81,82	143,19	58,10	190	165	115	94	150	20.4	7,6	7,1	31,9	34,6	45,0	-	2
VACBV85-10	10°	208,72	157,72	51	86,49	138,51	64,10	195	170	115	93	150	20.2	7,6	7,1	35,0	35,0	45,0	-	2
VACBV85-15	15°	206,73	166,73	40	91,00	134,00	70,70	195	170	115	91	120	19.8	7,6	7,1	38,2	35,7	45,0	-	2
VACBV85-20	20°	206,54	174,54	32	96,32	128,68	77,00	200	175	115	88	120	19.6	7,6	7,1	41,5	36,7	45,0	-	2
VACBV85-25	25°	205,15	183,15	22	100,45	124,55	84,90	200	175	115	88	120	19.3	7,6	7,1	45,0	38,0	45,0	-	2
VACBV85-30	30°	203,58	190,58	13	105,36	119,64	92,40	205	180	115	88	100	19.3	7,6	7,1	48,8	39,8	45,0	-	2
VACBV85-35	35°	200,86	198,86	2	110,03	114,97	100,20	205	180	115	88	100	19.2	7,6	7,1	53,1	42,1	45,0	-	2
VACBV85-40	40°	196,00	206,00	-10	115,47	109,53	107,50	205	180	115	88	100	19.1	7,6	7,1	57,9	45,0	45,0	-	2
VACBV85-45	45°	188,02	212,02	-24	121,65	103,35	114,00	205	180	118	88	90	19.2	7,6	7,0	62,0	47,7	44,0	-	2
VACBV85-50	50°	175,96	216,96	-41	126,56	98,44	121,60	200	175	118	88	90	19.1	7,6	6,8	62,2	47,7	40,0	-	2
VACBV85-55	55°	173,97	223,97	-50	128,85	96,15	124,80	200	175	118	88	90	19.3	7,8	7,5	59,3	48,6	34,0	55°	3
VACBV85-60	60°	171,14	230,14	-59	130,18	94,82	128,90	200	175	118	88	90	19.5	7,8	8,4	60,0	52,0	30,0	60°	3
VACBV85-65	65°	168,98	237,98	-69	133,11	91,89	132,40	200	175	118	88	80	19.9	8,1	9,0	59,2	53,6	25,0	65°	3
VACBV85-70	70°	165,99	245,99	-80	135,00	90,00	134,90	200	175	118	88	80	20.3	8,4	10,5	58,5	55,0	20,0	70°	3
VACBV85-75	75°	162,93	253,93	-91	137,64	87,36	136,90	200	175	118	88	80	20.7	8,8	12,6	58,0	56,0	15,0	75°	3

VACBV110
206kN

Cam width	Working force centrical	Working angle	Cam hight	Working surface	Max. tool weight	Gas spring type
110mm	206kN	0°~75	275mm	110mm x 128mm	8,9kg	VDI

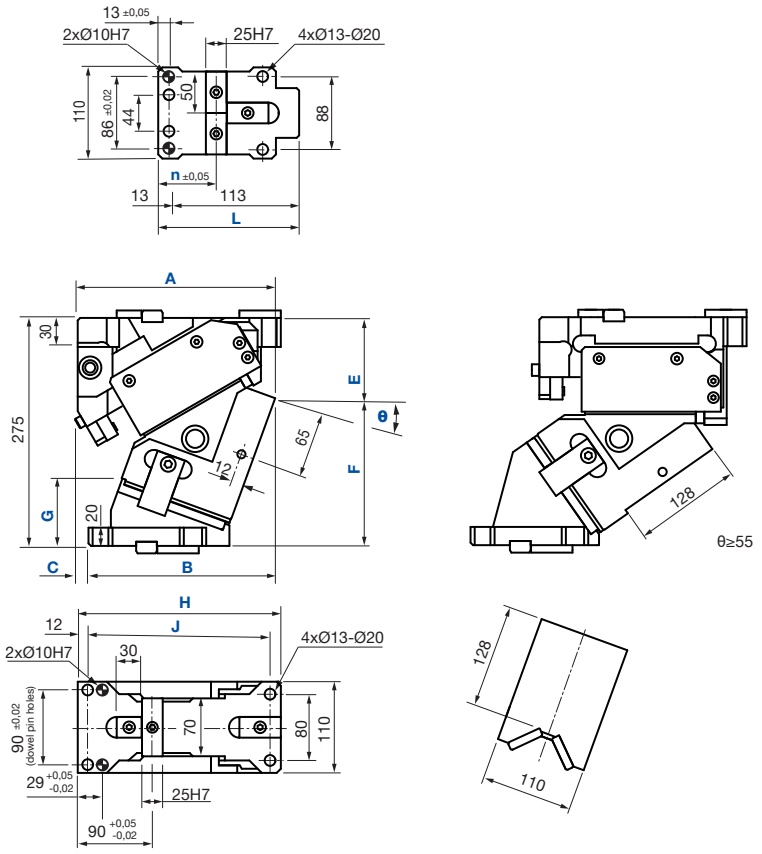

Cam diagram

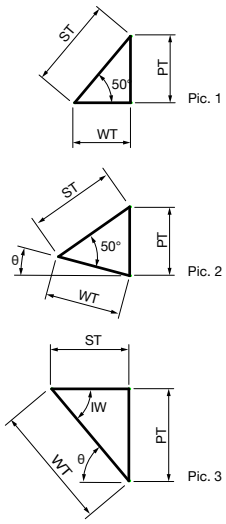

Rear Removable Space

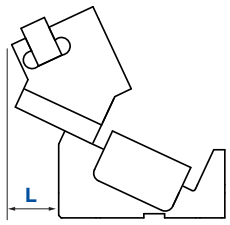

[mm]

	θ	A	B	C	E	F	G	H	J	n	M	L	Total weight [kg]	Cam slider weight [kg]	Return force [kN]	WT	PT	ST	IW	pic.
VACBV110-00	0°	230,00	167,00	63	70,00	205,00	72,00	225	200	70	170	150	35,2	14,8	9,4	30,8	36,7	48,0	-	1
VACBV110-05	5°	234,04	181,04	53	75,89	199,11	78,60	230	205	70	170	150	34,9	14,8	9,4	34,1	36,9	48,0	-	2
VACBV110-10	10°	234,75	194,75	40	81,68	193,32	86,10	235	210	70	170	150	34,8	14,8	9,4	37,4	37,4	48,0	-	2
VACBV110-15	15°	236,14	210,14	26	88,34	186,66	93,60	240	215	70	170	120	34,7	14,8	9,4	40,7	38,1	48,0	-	2
VACBV110-20	20°	238,21	225,21	13	96,85	178,15	100,00	245	220	70	170	120	34,8	14,8	9,4	44,2	39,1	48,0	-	2
VACBV110-25	25°	237,98	236,98	1	105,18	169,83	107,20	250	225	65	170	120	34,9	14,8	9,4	48,0	40,6	48,0	-	2
VACBV110-30	30°	237,47	248,47	-11	114,29	160,71	114,00	255	230	65	170	100	35,2	14,8	9,3	52,1	42,5	48,0	-	2
VACBV110-35	35°	234,70	260,70	-26	125,18	149,82	119,40	255	230	60	170	100	35,4	14,8	9,3	56,6	44,9	48,0	-	2
VACBV110-40	40°	228,69	267,69	-39	134,82	140,18	126,40	255	230	60	165	100	35,6	14,8	9,3	61,7	48,0	48,0	-	2
VACBV110-45	45°	224,46	274,46	-50	144,18	130,82	133,60	255	230	60	160	90	35,8	14,8	9,3	67,6	52,0	48,0	-	2
VACBV110-50	50°	214,03	283,03	-69	156,26	118,74	138,60	250	225	60	160	90	36,2	14,8	9,3	74,7	57,2	48,0	-	2
VACBV110-55	55°	208,80	291,80	-83	159,17	115,83	143,80	250	225	60	155	90	36,5	15,0	9,7	75,0	61,4	43,0	55°	3
VACBV110-60	60°	204,61	300,61	-96	161,84	113,16	150,70	250	225	60	155	90	36,9	15,1	11,2	74,0	64,1	37,0	60°	3
VACBV110-65	65°	201,41	306,41	-105	164,57	110,43	153,70	250	225	60	150	80	37,0	15,3	12,6	73,3	66,5	31,0	65°	3
VACBV110-70	70°	200,73	312,73	-112	169,22	105,78	157,90	250	225	60	150	80	37,1	15,5	13,6	73,1	68,7	25,0	70°	3
VACBV110-75	75°	197,35	318,35	-121	174,61	100,39	161,80	250	225	60	142	80	37,7	15,6	16,2	73,4	71,0	19,0	75°	3

VACBV165
323kN

Cam width	Working force centrical	Working angle	Cam hight	Working surface	Max. tool weight	Gas spring type
165mm	323kN	0°~75	300mm	165mm x 133m	15,8kg	VDI

Details

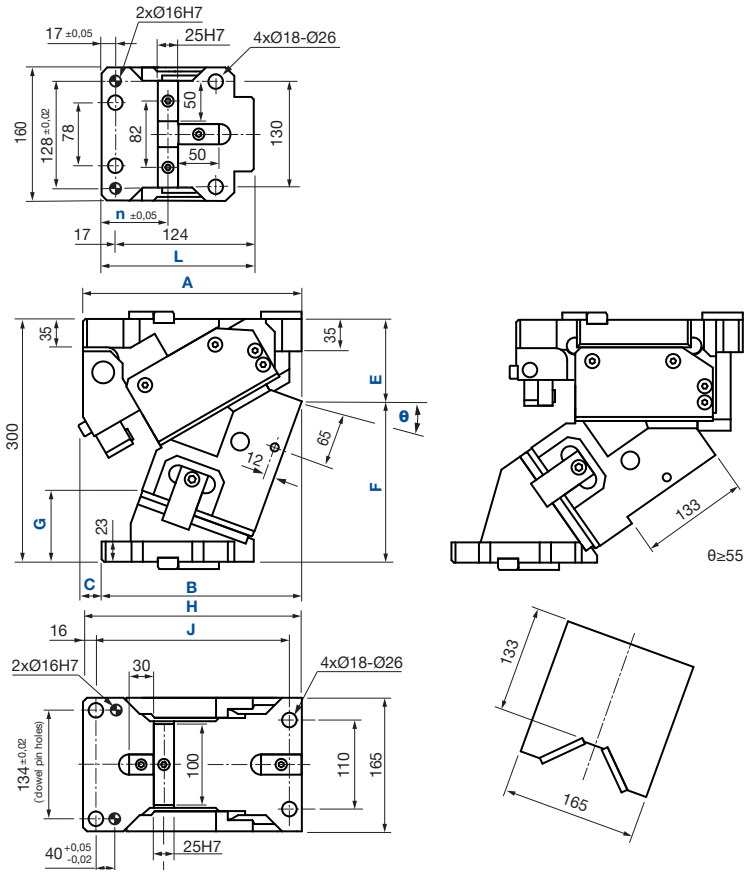

Cam diagram

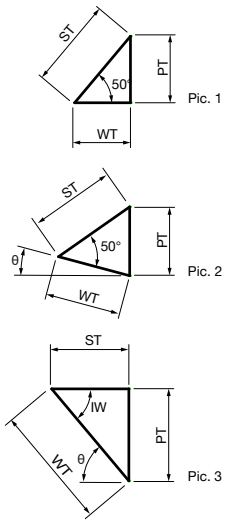

Rear Removable Space

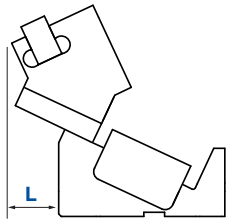

[mm]

	θ	A	B	C	E	F	G	H	J	n	M	L	Total weight [kg]	Cam slider weight [kg]	Return force [kN]	WT	PT	ST	IW	pic.
VACBV165-00	0°	261,00	184,00	77	74,00	226,00	88,70	250	219	82	188	150	64,7	25,9	15,4	30,9	36,8	48,0	-	1
VACBV165-05	5°	264,19	200,19	64	78,59	221,41	97,20	255	224	82	188	150	63,8	25,9	15,4	36,9	36,9	48,0	-	2
VACBV165-10	10°	266,98	215,98	51	86,10	213,90	103,70	260	229	82	188	150	63,4	25,9	15,4	37,4	37,3	48,0	-	2
VACBV165-15	15°	268,38	231,38	37	94,48	205,52	110,20	265	234	82	188	120	63,0	25,9	15,4	40,7	38,1	48,0	-	2
VACBV165-20	20°	270,41	247,41	23	101,71	198,30	118,50	270	239	82	188	120	62,7	25,9	15,3	44,2	39,1	48,0	-	2
VACBV165-25	25°	270,08	256,08	11	109,74	190,26	126,70	275	244	82	188	120	62,5	25,9	15,3	48,0	40,6	48,0	-	2
VACBV165-30	30°	267,40	274,40	-7	118,56	181,44	134,50	275	244	82	188	100	62,3	25,9	15,3	52,1	42,5	48,0	-	2
VACBV165-35	35°	266,40	286,40	-20	128,13	171,87	142,00	280	249	82	188	100	62,6	25,9	15,2	56,6	44,9	48,0	-	2
VACBV165-40	40°	267,10	302,10	-35	140,43	159,57	147,00	285	254	82	188	100	63,5	25,9	15,2	61,7	48,0	48,0	-	2
VACBV165-45	45°	260,53	311,53	-51	153,43	146,57	151,30	285	254	82	188	90	64,1	25,9	15,2	67,6	52,0	48,0	-	2
VACBV165-50	50°	251,71	318,71	-67	165,10	134,90	157,00	280	249	82	183	90	64,6	25,9	15,9	74,7	57,2	48,0	-	2
VACBV165-55	55°	246,27	326,27	-80	167,19	132,82	158,10	280	249	70	180	90	64,9	26,3	18,3	75,0	61,4	43,0	55°	3
VACBV165-60	60°	239,91	331,61	-92	172,77	127,24	163,80	280	249	70	175	90	65,3	26,4	20,5	74,0	64,1	37,0	60°	3
VACBV165-65	65°	235,85	343,85	-108	173,59	126,41	166,90	280	249	70	175	80	66,0	26,7	20,5	73,3	66,5	31,0	65°	3
VACBV165-70	70°	236,90	347,60	-111	177,84	122,16	174,10	280	249	70	170	80	66,0	26,2	22,0	73,1	68,7	25,0	70°	3
VACBV165-75	75°	232,36	349,36	-117	185,82	114,18	173,30	280	249	70	161	80	66,5	26,9	26,0	73,4	71,0	19,0	75°	3

13.01/D01.21

Sankyo Oilless Industry GmbH - 40724 Hilden - Itterpark 7-9 - 40721 Hilden - Postfach 126
Telephone +49 (0) 2103-584 600 - Telefax +49 (0) 2103-584 611 - www.sankyo-oilless.de - Email: Info@de.sankyo-oilless.com