CMSD / CMSDG

Low-cost CAM-Unit for punching operations, narrow dasign with easy installation and maintenance

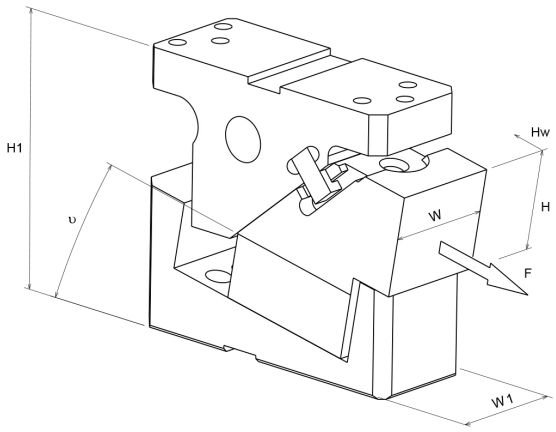

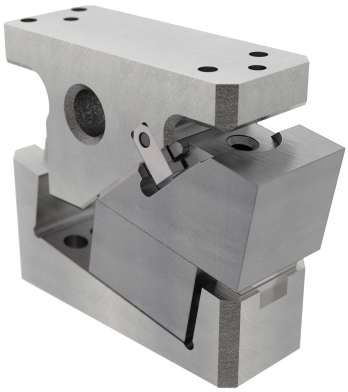

Product discription:

Low-cost CAM-Unit for punching operations, narrow design with easy installation and maintenance
Options:

- SC: Extend the mounting surface forward from
  - CMSD52: 1 to 60mm (at increments of 1mm)

- WC: The mounting surface width from
  - CMSD52: 53 to 100mm (at increments of 1mm)
  - CMSD90: 91 to 150mm (at increments of 1mm)

- N12: Dowel pin holes of cam holder and cam driver change to Ø12H7 (only CMSD90 / CMSDG90)

Please use the comment function at the end of enquiry form if you need an intermediate size.

For more information, please read the ***PDF***

Article properties:

CAM-Type	Die-mounted CAM

Variants:

Articlenumber	Article name	Cam Width W1	Shutheight H1	Work Area Width W	Work Area Height H	Stroke Hw	Working Angle u (°)	Returnforce Fr (kN)	Working Force F (kN)*	Weight (kg)
CMSD52-000001	CMSD52-00-55	52	215	52	75	55	0	-	19,6	14,2
CMSD52-000065	CMSD52-05-55	52	255	52	75	55	5	-	19,6	18,5
CMSD52-000129	CMSD52-10-55	52	255	52	75	55	10	-	19,6	19,4
CMSD52-000193	CMSD52-15-55	52	255	52	75	55	15	-	19,6	20
CMSD52-000257	CMSD52-20-55	52	255	52	75	55	20	-	19,6	19,5
CMSD90-000321	CMSD90-00-55	90	220	90	82	55	0	-	38,2	24,9
CMSD90-000417	CMSD90-05-55	90	220	90	82	55	5	-	38,2	25,9
CMSD90-000513	CMSD90-10-55	90	220	90	82	55	10	-	38,2	27,3
CMSD90-000609	CMSD90-15-55	90	225	90	82	55	15	-	38,2	29,3
CMSDG52-00-55	CMSDG52-00-55	52	215	52	75	55	0	-	39,2	13,7

CMSD / CMSDG

Low-cost CAM-Unit for punching operations, narrow dasign with easy installation and maintenance

Articlenumber	Article name	Cam Width W1	Shutheight H1	Work Area Width W	Work Area Height H	Stroke Hw	Working Angle u (°)	Returnforce Fr (kN)	Working Force F (kN)*	Weight (kg)
CMSDG52-05-55	CMSDG52-05-55	52	255	52	75	55	5	-	39,2	19,2
CMSDG52-10-55	CMSDG52-10-55	52	255	52	75	55	10	-	39,2	20,1
CMSDG52-15-55	CMSDG52-15-55	52	255	52	75	55	15	-	39,2	20,7
CMSDG52-20-55	CMSDG52-20-55	52	255	52	75	55	20	-	39,2	20,3
CMSDG90-00-55	CMSDG90-00-55	90	220	90	82	55	0	-	58,8	25,8
CMSDG90-05-55	CMSDG90-05-55	90	220	90	82	55	5	-	58,8	26,9
CMSDG90-10-55	CMSDG90-10-55	90	220	90	82	55	10	-	58,8	28,4
CMSDG90-15-55	CMSDG90-15-55	90	225	90	82	55	15	-	58,8	29,7